MODEL RM2192 ELECTRIC HEATERS, CONNECTION CORD AND WIRING DIAGRAM

WIRING DIAGRAM

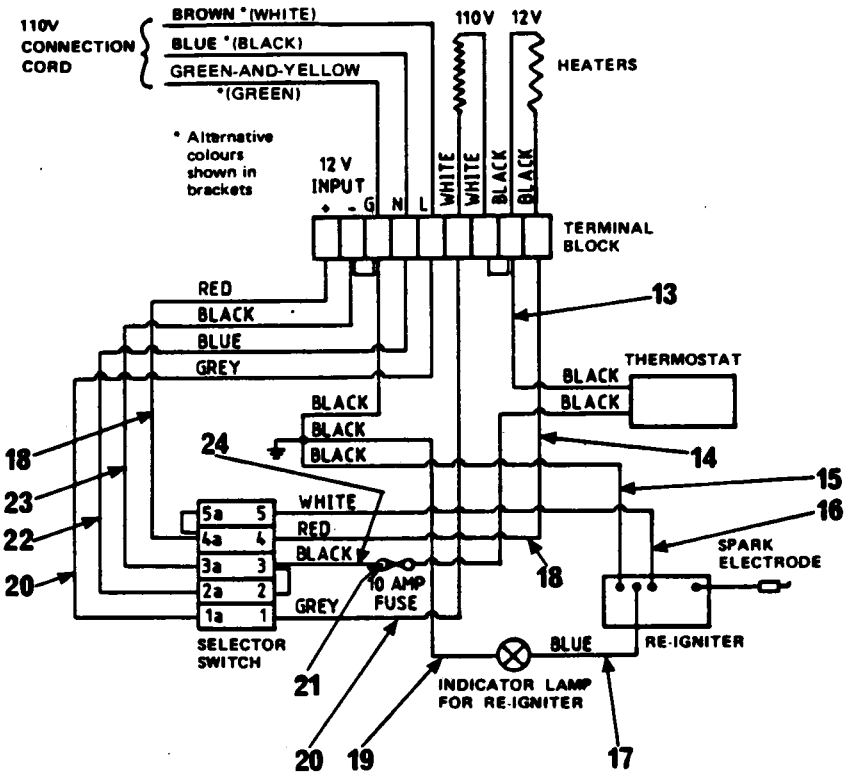

Item No.	Part No.	Description
1	0340197-08/6	Sleeve for heater leads
2	2904306-00/4	Plastic Tie
3	2902192-12/5	Heater, 12V, 95W
4	2903296-02/4	Heater, 110V, 95W
5	2903774-00/4	Strap for boiler insulation
6	2002699-00/3	Connection Cord, 3-core, with plug
7	2904465-00/8	Grommet, for heater leads
8	0341733-00/4	Screw, Poz. Pan. Hd., ⅝" No.6
9	2903104-00/4	Cord Clamp
10	2901431-00/3	Screw, Poz. Pan. Hd., ¾" No.4
11	2904430-00/2	Terminal Block, 9-way
12	2903934-00/4	Boiler Insulation
13	2904469-00/0	Lead, complete, black, (thermostat to terminal block)
14	2904478-00/1	Lead, complete, black, (fuse to thermostat)
15	2904470-00/8	Lead, complete, black, (spark electrode to earth post)
16	2904474-00/0	Lead, complete, white, (selector switch to re-igniter)
17	2904468-00/2	Lead, complete, blue, (indicator lamp to re-igniter)
18	2904473-00/2	Lead, complete, red, (selector switch to terminal block)
19	2904467-00/4	Lead, complete, black, (indicator lamp to earth post)
20	2904472-00/4	Lead, complete, grey, (selector switch to terminal block)
21	2002579-00/5	Fuse Holder, with fuse
22	2904475-00/7	Lead, complete, blue, (terminal block to selector switch)
23	2904469-01/8	Lead, complete, black, (terminal block to selector switch)
24	2904477-00/3	Lead, complete, black, (selector switch to fuse)
—	2901716-10/6	Lead, complete, green-and-yellow (earth post to cooling unit) (not illustrated)